MODEL 8041
(NATIONAL PUBLIC RADIO)

TFT

TIME AND FREQUENCY
TECHNOLOGY, INC.

MODEL 8041
(NATIONAL PUBLIC RADIO)

TABLE OF CONTENTS

1. NPR Memorandum Dated 12-9-81

2. Fig. 1 Interconnect Diagram

3. PC Assembly Drawing 6608-3273-B

4. Schematic Drawing 6601-3273-C

5. PC Assembly Drawing 6608-3282-D

6. Schematic Drawing 6601-3273-D

7. Model Assembly Drawing 5102-3324-C

Digitized by the Internet Archive
in 2024 with funding from
Amateur Radio Digital Communications, Grant 151

https://archive.org/details/tftmodel804100unse

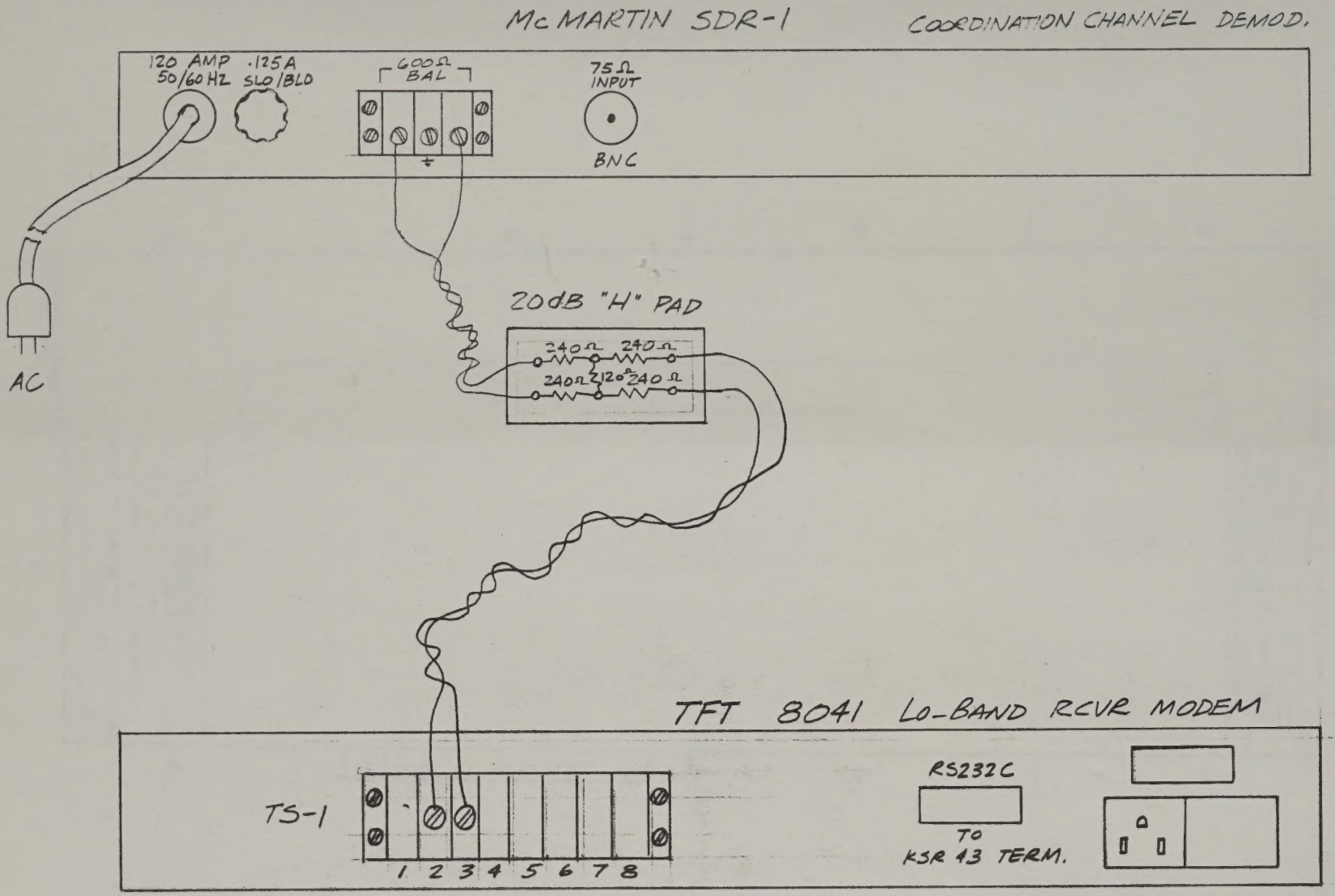
McMARTIN SDR-1
COORDINATION CHANNEL DEMOD.
120 AMP .125A
50/60 HZ SLO/BLO
600Ω BAL
75Ω INPUT
BNC
AC
20dB "H" PAD
240Ω 240Ω
240Ω 120Ω 240Ω
TFT 8041 LO-BAND RCVR MODEM
TS-1
1 2 3 4 5 6 7 8
RS232C
TO
KSR 43 TERM.

FIG. 1

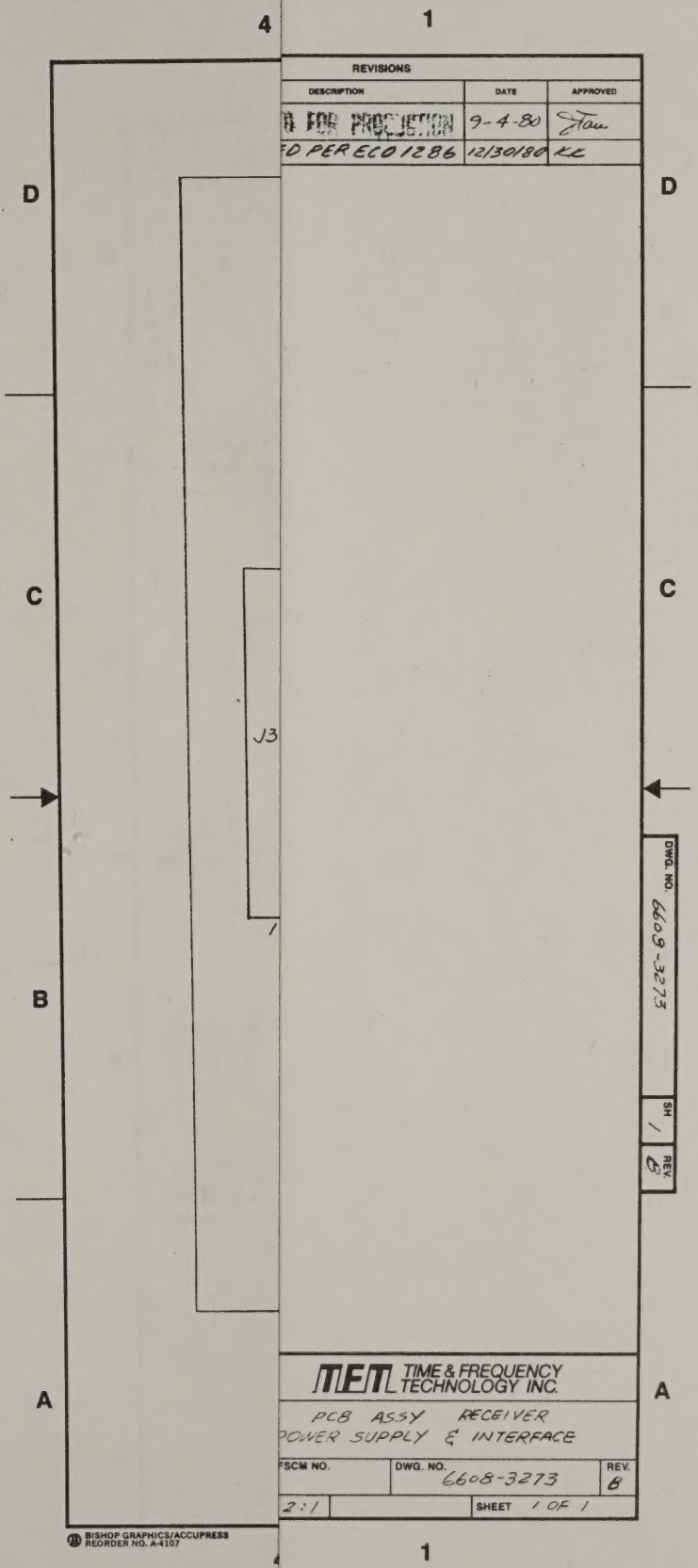
4
1
REVISIONS
DESCRIPTION
DATE
APPROVED
A FOR PRODUCTION
9-4-80
FD PER ECO 1286
12/30/80
KL
D
C
B
A
J3
1
DWG. NO. 6609-3273
SH 1
REV. B
TIME & FREQUENCY TECHNOLOGY INC.
PCB ASSY RECEIVER
POWER SUPPLY & INTERFACE
FSCM NO.
DWG. NO. 6608-3273
REV. B
2:1
SHEET 1 OF 1
BISHOP GRAPHICS/ACCUPRESS
REORDER NO. A-4107

REVISIONS				
ZONE	REV.	DESCRIPTION	DATE	APPROVED
	A	RELEASED FOR PRODUCTION	9-4-80	[illegible]
	B	REVISED PER ECO 1286	12/30/80	KK

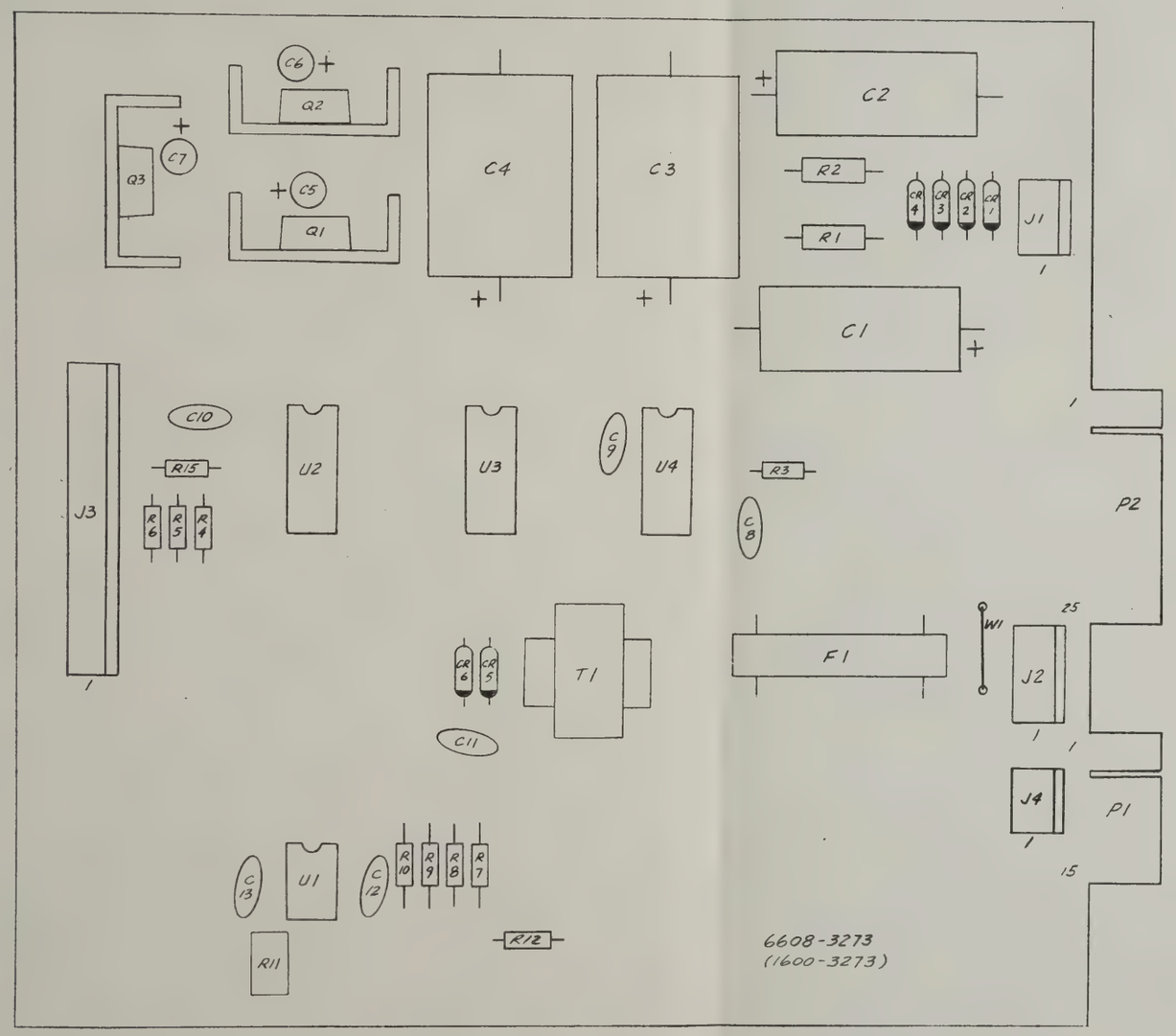

REF: SCHEMATIC 6601-3273

5102-3324	8041
NEXT ASSY	USED ON

CONTRACT NO.

APPROVALS	DATE
DRAWN [illegible]	9-3-80
CHECKED [illegible]	9
ISSUED [illegible]	[illegible]

TFT TIME & FREQUENCY TECHNOLOGY INC.

PCB ASSY RECEIVER POWER SUPPLY & INTERFACE

SIZE	FSCM NO.	DWG. NO.	REV.
C		6608-3273	B

SCALE 2:1 SHEET 1 OF 1

DWG. NO. 6609-3273 SH 1 REV B

BISHOP GRAPHICS/ACCUPRESS REORDER NO. A-4107

REF:
P.C. BD: 1600
P.C. BD ASSY

REVISIONS		
DESCRIPTION	DATE	APPROVED
RELEASED FOR PROD'CTN	9/3/80	JRM
REVISED PER ECO 1285	12/30/80	K.K.
REVISED PER ECO 1379	5/20/81	DM

FROM PWR XFMR

J4
1 NOT USED
2

P2
1 PROTECTIVE GND
5 RECEIVED DATA
+12V R3 2.2K
9 CLEAR TO SEND
11 DATA SET READY
13 SIGNAL GND
15 RECEIVED LINE SIGNAL DETECTOR
TO RS 232 C PORT

FROM MODEM PC

J2
1
2 N/C

FROM TS-1

R10 1.0K 1%
+12V C12 .01
U1
C13 .01
-12V
16 REC FSK
4 LOGIC Ø
8
TO MODEMS

FROM RS232C PORT

6 RTSE
2 XMTD DATA

P1

DWG. NO. 6601-3273
SH 1
REV. C

TIME & FREQUENCY TECHNOLOGY INC.

SCHEMATIC RECEIVER POWER SUPPLY & INTERFACE

SIZE	FSCM NO.	DWG. NO.	REV.
C		6601-3273	C

SCALE NONE SHEET 1 OF 1

BISHOP GRAPHICS/ACCUPR
REORDER NO. A-4107

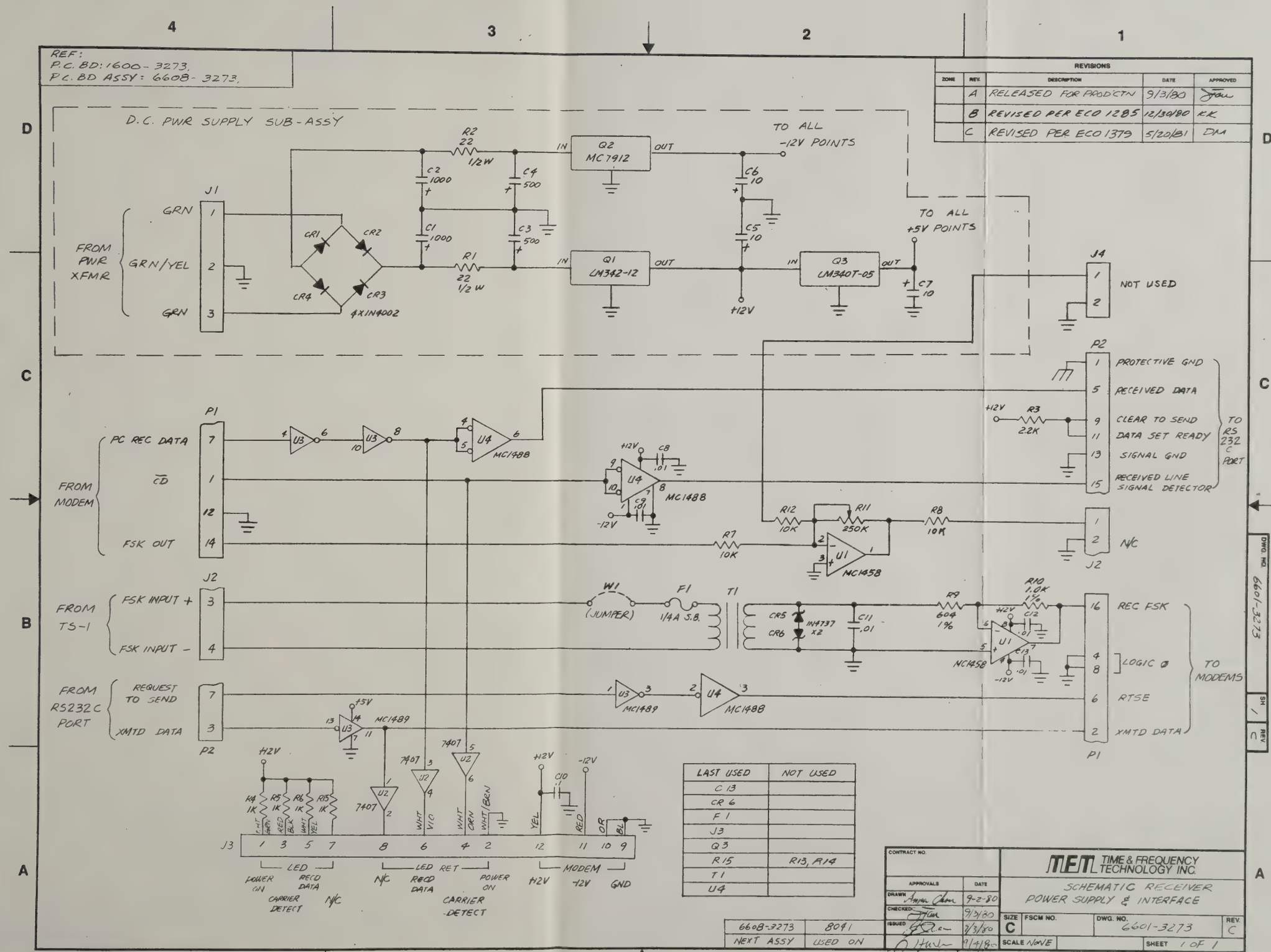
REF:
P.C. BD: 1600-3273,
P.C. BD ASSY: 6608-3273,
REVISIONS
ZONE | REV. | DESCRIPTION | DATE | APPROVED
A | RELEASED FOR PROD'CTN | 9/3/80
B | REVISED PER ECO 1285 | 12/30/80 | KK
C | REVISED PER ECO 1379 | 5/20/81 | DM
D.C. PWR SUPPLY SUB-ASSY
FROM PWR XFMR
GRN
GRN/YEL
GRN
J1
CR1
CR2
CR3
CR4
4X1N4002
R2 22 1/2W
R1 22 1/2 W
C1 1000
C2 1000
C3 500
C4 500
Q2 MC7912
Q1 LM342-12
Q3 LM340T-05
IN
OUT
TO ALL -12V POINTS
TO ALL +5V POINTS
C6 10
C5 10
C7 10
+12V
J4
NOT USED
P2
PROTECTIVE GND
RECEIVED DATA
CLEAR TO SEND
DATA SET READY
SIGNAL GND
RECEIVED LINE SIGNAL DETECTOR
TO RS 232 C PORT
R3 2.2K
P1
FROM MODEM
PC REC DATA
CD
FSK OUT
U3
U4 MC1488
C8 .01
C9 .01
R12 10K
R11 250K
R8 10K
R7 10K
U1 MC1458
J2
N/C
FROM TS-1
FSK INPUT +
FSK INPUT -
W1 (JUMPER)
F1 1/4A S.B.
T1
CR5
CR6
1N4737 X2
C11 .01
R9 604 1%
R10 1.0K 1%
C12 .01
C13 .01
REC FSK
LOGIC Ø
RTSE
XMTD DATA
TO MODEMS
FROM RS232C PORT
REQUEST TO SEND
XMTD DATA
MC1489
+5V
7407
U2
R4 1K
R5 1K
R6 1K
R15 1K
C10 .1
J3
LED
LED RET
MODEM
POWER ON
RECD DATA
CARRIER DETECT
N/C
RECD DATA
POWER ON
CARRIER DETECT
+12V
-12V
GND
LAST USED | NOT USED
C 13
CR 6
F 1
J3
Q3
R15 | R13, R14
T1
U4
6608-3273 | 8041
NEXT ASSY | USED ON
CONTRACT NO.
APPROVALS | DATE
DRAWN 9-2-80
CHECKED 9/3/80
ISSUED 9/3/80
9/4/80
TIME & FREQUENCY TECHNOLOGY INC.
SCHEMATIC RECEIVER
POWER SUPPLY & INTERFACE
SIZE C
FSCM NO.
DWG. NO. 6601-3273
REV. C
SCALE NONE
SHEET 1 OF 1
DWG. NO. 6601-3273
SH 1
REV. C
BISHOP GRAPHICS/ACCUPRESS REORDER NO. A-4107

NEXT ASSY	USED ON
5102-3324	8041

REVISIONS

SYM	DESCRIPTION	DR	CHK	AUTH	DATE
A	RELEASED FOR PRODUCTION	[illegible]	[illegible]	[illegible]	9/8/80
B	REV PER ECO 1281	[illegible]	[illegible]	[illegible]	[illegible]/80
C	REVISED PER ECO 1345	[illegible]			4/9/81
D	REVISED PER ECO 1379			DM	5/20/81

DWG. NO. 6608-3282

		ITEM NO.	EN NO.	PART NO	DESCRIPTION	REF DES
QTY PER ASSY					LIST OF MATERIALS	

REMOVE ALL BURRS AND SHARP EDGES

TOLERANCES UNLESS OTHERWISE SPECIFIED
.XX ± ~ ANGULAR
.XXX ± ~ ± ~

DO NOT SCALE THIS PRINT

		DATE
DRAWN BY	[illegible]	9-8-80
CHK BY	[illegible]	9/8/80
PROJ ENG	[illegible]	9/8/80
MFG ENG	[illegible]	9/8/80
APPD	[illegible]	9/8/80
APPD.		
ECO NO.		

TET TIME & FREQUENCY TECHNOLOGY INC.
3000 Olcott St. Santa Clara California 95050
(408) 246-6365

TITLE PCB ASSY RECEIVER LO-BAND MODEM

SIZE D | DRAWING NO 6608-3282 | REV D

SCALE 2:1 | SHT 1 OF 1

BISHOP GRAPHICS/ACCUPRESS REORDER NO A-1538

NEXT ASSY	USED ON
5102-3324	8071

REVISIONS

SYM	DESCRIPTION	DR	CHK	AUTH	DATE
A	RELEASED FOR PRODUCTION	[illegible]	[illegible]	[illegible]	9/6/90
B	[illegible]	[illegible]	[illegible]	[illegible]	[illegible]
C	REVISED PER ECO 1345	KL			1/8/91
D	REVISED PER ECO 1379			DM	5/28/91

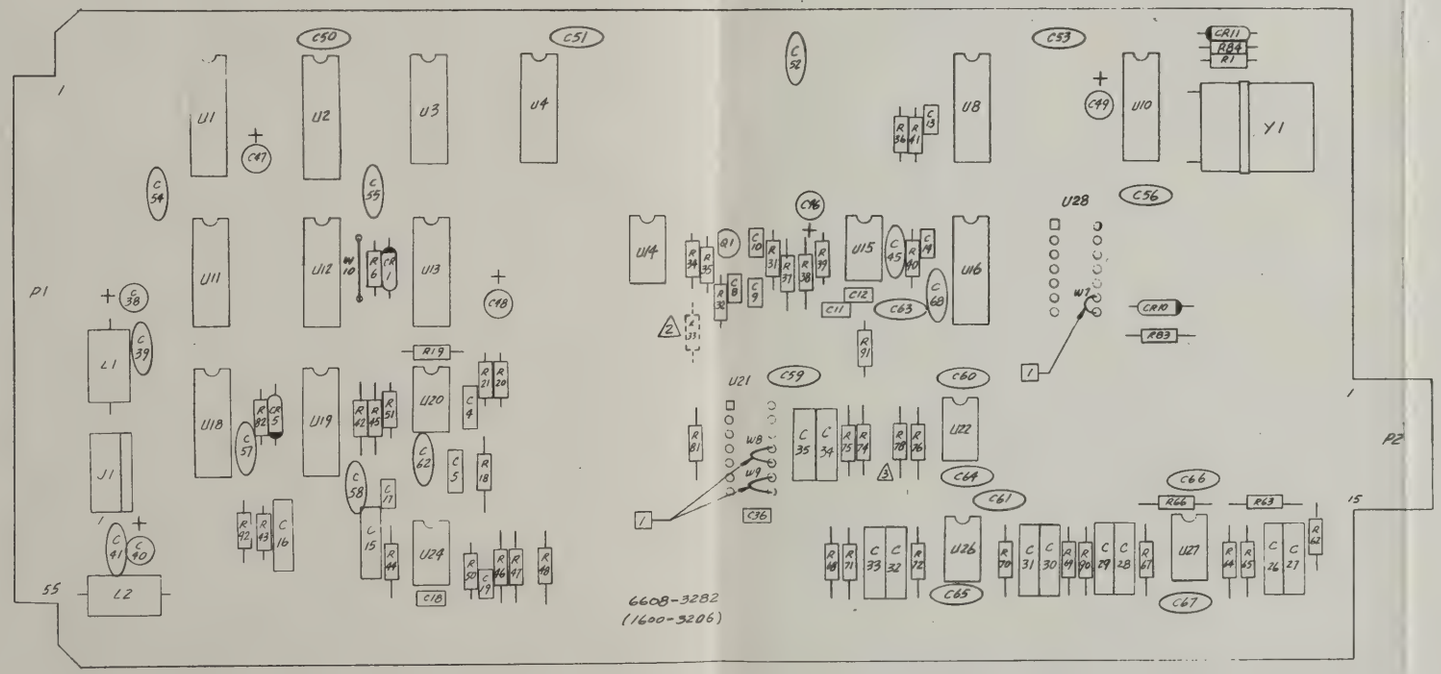

REF: SEE SCHEMATIC 6601-3282

NOTES:

1. JUMPERS AS SHOWN.
2. R33 DELETED
3. R78 VALUE CHANGED

ITEM NO.	QTY PER ASSY	PART NO	DESCRIPTION	REF DES

LIST OF MATERIALS

REMOVE ALL BURRS AND SHARP EDGES

TOLERANCES UNLESS OTHERWISE SPECIFIED
.xx ± ~ ANGULAR
.xxx ± ~ ± ~

DO NOT SCALE THIS PRINT

	DRAWN BY	DATE
CHK BY		9/6/90
PROJ ENG		9/6/90
MFG ENG		9/6/90
APPD		9/6/90
APPD		
ECO NO		

TFT TIME & FREQUENCY TECHNOLOGY INC.
3000 Olcott St Santa Clara California 95050
(408) 246-6095

TITLE: PCB ASSY RECEIVER LO-HAND MODEM

SIZE D | DRAWING NO 6608-3282 | REV D

SCALE 2:1 | SHT 1 OF 1

DWG. NO. 6608-3282

BISHOP GRAPHICS/ACCUPRESS RECORDER NO. A-1538

NEXT ASSY	USED ON
08-3282	8041

REVISIONS

SYM	DESCRIPTION	DR	CHK	AUTH	DATE
A	RELEASED FOR PRODUCTION	AC	[illegible]	[illegible]	9/4/81
B	REV PER ECO 1282	AC	[illegible]	[illegible]	12/1/80
C	REVISED PER ECO 1344	KK	KK		4/8/81
D	REVISED PER ECO 1379			[illegible]	5/20/81

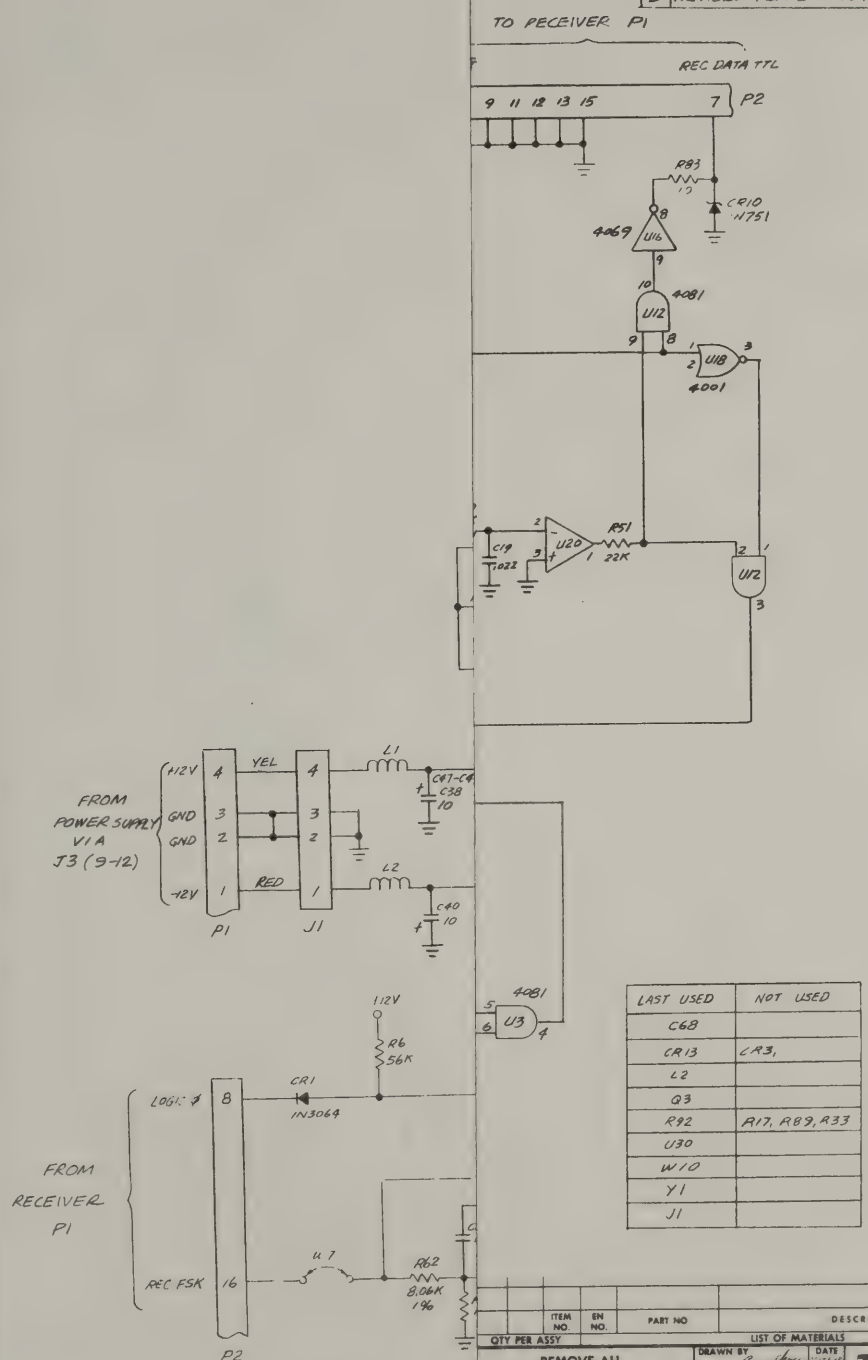

LAST USED	NOT USED
C68	
CR13	CR3,
L2	
Q3	
R92	R17, R89, R33
U30	
W10	
Y1	
J1	

QTY PER ASSY	ITEM NO.	EN NO.	PART NO	DESCRIPTION	REF DES.

LIST OF MATERIALS

REMOVE ALL BURRS AND SHARP EDGES

TOLERANCES UNLESS OTHERWISE SPECIFIED
.XX ± ~ ANGULAR
.XXX ± ~ ± ~

DO NOT SCALE THIS PRINT

		DATE
DRAWN BY	[illegible]	[illegible]
CHK. BY	[illegible]	[illegible]
PROJ ENG	[illegible]	2-3-80
MFG ENG	[illegible]	9/4/80
APPD	[illegible]	[illegible]
APPD		
ECO NO.		

TFT TIME & FREQUENCY TECHNOLOGY INC.
3000 Olcott St Santa Clara California 95050
(408) 246-6365

TITLE: LO-BAND MODEM RECEIVER

SIZE D | DRAWING NO 6601-3282 | REV. D

SCALE NONE | SHT 1 OF 1

DWG. NO. 6601-3282

BISHOP GRAPHICS/ACCUPRESS REORDER NO. A-1539

NEXT ASSY	USED ON
6648-3282	8041

REVISIONS					
SYM	DESCRIPTION	DR	CHK	AUTH	DATE
A	[illegible]	[illegible]	[illegible]	[illegible]	[illegible]
B	REV PER ECO 1282	[illegible]	[illegible]	[illegible]	[illegible]
C	REVISED PER ECO 1344	KLR	KLR		4/19/81
D	REVISED PER ECO 1379			[illegible]	6/20/81

TO RECEIVER P1

CARRIER DET

REC DATA TTL

P2

CD

FROM POWER SUPPLY VIA J3 (9-12)

P1

J1

FROM RECEIVER P1

P2

LAST USED	NOT USED
C68	
CR13	CR3,
L2	
Q3	
R92	R17, R89, R33
U30	
W10	
Y1	
J1	

ITEM NO	EN NO	PART NO	DESCRIPTION	REF DES

QTY PER ASSY

LIST OF MATERIALS

REMOVE ALL BURRS AND SHARP EDGES

TOLERANCES UNLESS OTHERWISE SPECIFIED
.XX ± ~ ANGULAR
.XXX ± ~ ±~

DO NOT SCALE THIS PRINT

	DRAWN BY	DATE
	CHK BY	
	PROJ. ENG.	
	MFG. ENG.	8/4/81
	APPD	
	APPD	
	ECO NO	

TFT TIME & FREQUENCY TECHNOLOGY INC.
3000 Olcott St. Santa Clara California 95050
(408) 748-8385

TITLE: LO-BAND MODEM RECEIVER

SIZE D | DRAWING NO 6601-3282 | REV D

SCALE NONE | SHT 1 OF 1

DWG. NO. 6601-3282

BISHOP GRAPHICS/ACCUPRESS REORDER NO. A-1838

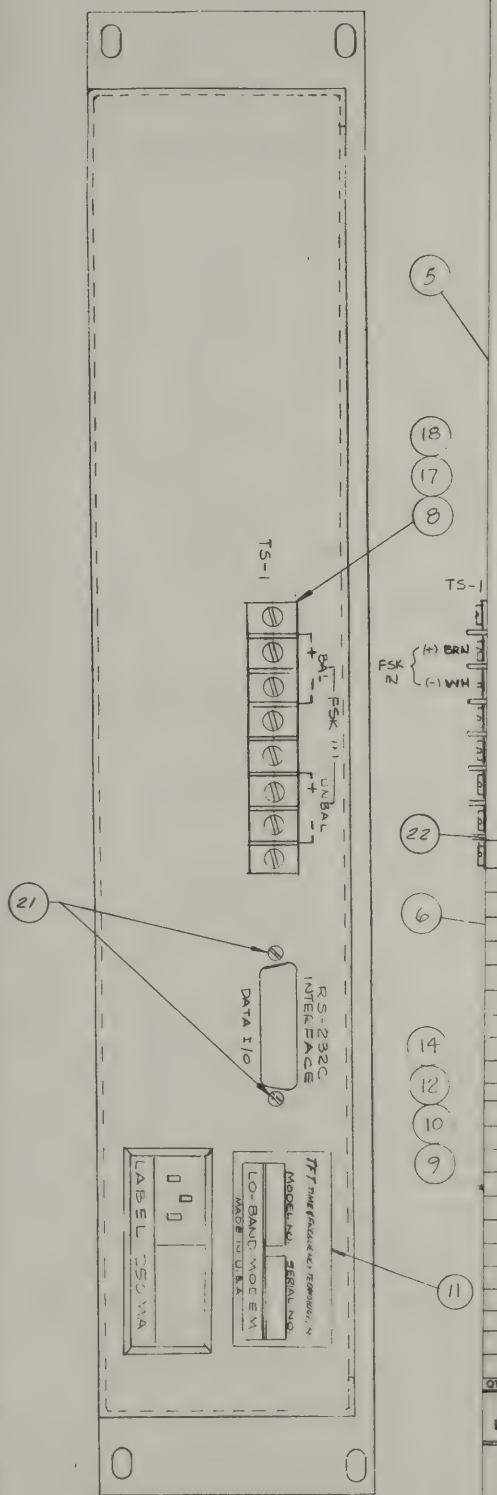

XT ASSY	USED ON
6-9041	9041

REVISIONS

SYM	DESCRIPTION	DR	CHK	AUTH	DATE
A	REVISED PER ECO 1297	JT			
B	REVISED PER ECO 1297 ADD ITEM 21	KK			1/30/81
C	REVISED PER ECO 1347			JM	9/10/81

TABLE - I

P2	RS 232
1	PIN 1 PROTECTIVE GND
2	" 2 XMTD DATA
3	" 3 RECD DATA
7	" 4 RQST TO SEND
9	" 5 CLEAR TO SEND
11	" 6 DATA SET READY
13	" 7 SIGNAL GROUND
15	" 8 RECD LINE SIG. DET.

QTY PER ASSY	ITEM NO	EN NO	PART NO	DESCRIPTION	REF DES
1	22		4750-0419	CABLE ASSY, FSK-IN	
2	21		2251-0006	JACK SOCKET ASSY ANSLEY P/N 609-006	
	20			NOT USED	
4	19		2106-3148	SCREW SOCK PH CAP 6-32 x 3/8	
2	18		2111-0004	KEP NUT #6	
2	17		2106-3258	SCREW PH SLOT. 6-32 x 5/8	
10	16		2112-0001	WASHER #4	
10	15		2104-0040	SCREW PH, SLOT, 4-40 x 1/2 LG	
1	14		3002-1500	LABEL, FUSE 250 MA	
1	13		5102-3325	TRANSFORMER ASSY	
1	12		1900-0004	FUSE 1/4A-SB	
	11		3001-0003	SERIAL TAG - (PART OF SHIP ASSY)	
1	10		1950-7742	PWR CORD (NOT SHOWN)	
1	9		1910-0006	FILTER/FUSEHLDER	
1	8		1700-0061	BARRIER STRIP 6 POS.	
1	7		4750-0418	DC PWR HARNESS 8041	
1	6		4750-0080	CABLE ASSY 26 PIN	
1	5		4750-0160	CABLE ASSY 16 PIN	
1	4		5608-3282	PCB ASSY MODEM	
1	3		5608-3273	PCB ASSY PWR SPLY/INTFACE	
1	2		2001-2677	CHASSIS	
1	1		2000-0920	FRONT PANEL	

LIST OF MATERIALS

REMOVE ALL BURRS AND SHARP EDGES

TOLERANCES UNLESS OTHERWISE SPECIFIED
.XX ± ANGULAR ±
.XXX ±

DO NOT SCALE THIS PRINT

DRAWN BY JOHN TAU DATE 5/29/80
CHK BY
PROJ ENG
MFG ENG
APPD
APPD
ECO NO

TET TIME & FREQUENCY TECHNOLOGY INC
3000 Olcott St Santa Clara California 95050
(408) 246-6365

TITLE MODEL ASSEMBLY LO-BAND MODEM, RCVR 8041

SIZE D | DRAWING NO 5608-3324 | REV C

SCALE FULL | SHT 1 OF 1

DWG. NO.

BISHOP GRAPHICS/ACCUPRESS REORDER NO. A-1838

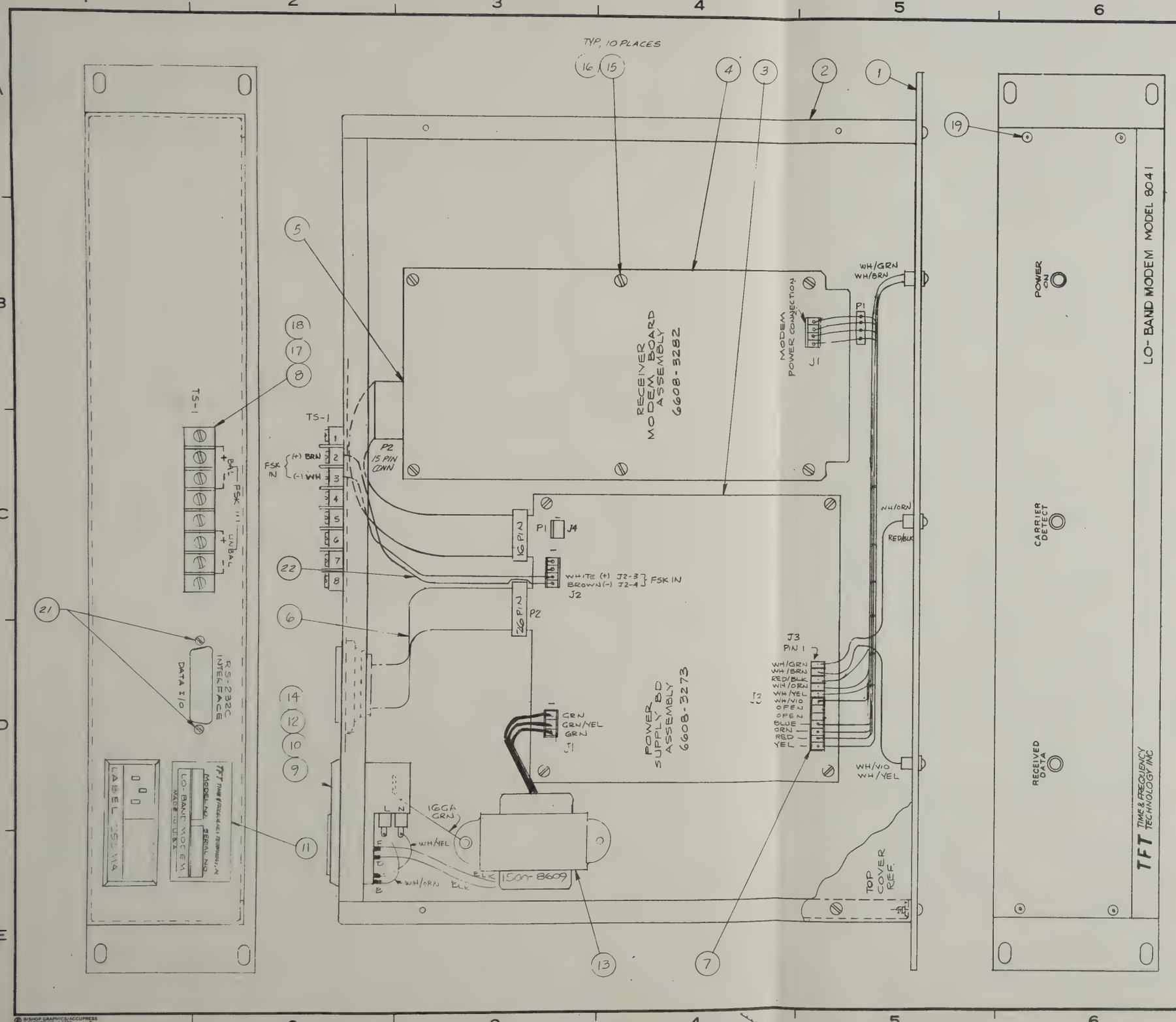

NEXT ASSY	USED ON
5116-8041	8041

REVISIONS

SYM	DESCRIPTION	DR	CHK	AUTH	DATE
A	[illegible]	LT			
B	REVISED PER ECO 1297 ADD ITEM 21	KK			1/30/81
C	REVISED PER ECO 1397			DM	5/20/81

TABLE - I

P2	RS 232
1	PIN 1 PROTECTIVE GND
2	" 2 XMTD DATA
5	" 3 REC'D DATA
7	" 4 RQST TO SEND
9	" 5 CLEAR TO SEND
11	" 6 DATA SET READY
13	" 7 SIGNAL GROUND
15	" 8 REC'D LINE SIG. DET.

QTY PER ASSY	ITEM NO.	EN NO.	PART NO.	DESCRIPTION	REF DES.
1	22		4750-0419	CABLE ASSY, FSK-IN	
2	21		2251-0006	JACK SOCKET ASSY ANSLEY PIN 609-006	
	20			NOT USED	
4	19		2106-3148	SCREW SOCK PH CAP 6-32x3/8	
2	18		2111-0004	KEP NUT #6	
2	17		2106-3258	SCREW PH SLOT 6-32x 5/8	
10	16		2112-0001	WASHER #4	
10	15		2104-0040	SCREW PH, SLOT, 4-40x1/2 LG	
1	14		3002-1500	LABEL, FUSE 250 MA	
1	13		5102-3325	TRANSFORMER ASSY	
1	12		1900-0004	FUSE 1/4 A - SB	
	11		3001-0003	SERIAL TAG - (PART OF SHIP ASSY)	
1	10		1950-7742	PWR CORD (NOT SHOWN)	
1	9		1910-0006	FILTER/FUSE HLDER	
1	8		1700-0061	BARRIER STRIP 6 POS.	
1	7		4750-0418	DC PWR HARNESS 8041	
1	6		4750-0080	CABLE ASSY 26 PIN	
1	5		4750-0160	CABLE ASSY 16 PIN	
1	4		6608-3282	PCB ASSY MODEM	
1	3		6608-3273	PCB ASSY PWR SPLY/INTFACE	
1	2		2001-2677	CHASSIS	
1	1		2000-0920	FRONT PANEL	

LIST OF MATERIALS

REMOVE ALL BURRS AND SHARP EDGES

TOLERANCES UNLESS OTHERWISE SPECIFIED
.XX ± ANGULAR
XXX ± ±

DO NOT SCALE THIS PRINT

DRAWN BY JOHN TAU DATE 5/29/80
CHK BY
PROJ ENG
MFG ENG
APPD
APPD
ECO NO.

TFT TIME & FREQUENCY TECHNOLOGY INC
3000 Olcott St. Santa Clara California 95050
(408) 246-6365

TITLE MODEL ASSEMBLY LO-BAND MODEM, RCVR 8041

SIZE D DRAWING NO 5102-3324 REV C
SCALE FULL SHT 1 OF 1

DWG NO.

BISHOP GRAPHICS/ACCUPRESS REORDER NO. A-1539

National Public Radio 2025 M Street, N.W. Washington, D.C. 20036 202-785-5400

MEMORANDUM

DATE: December 9, 1980

TO: All Stations/Chief Engineers

FROM: Steve Kauffman/NPR Washington
(202) 785-6343

SUBJECT: New DACS Equipment/Disposition of ASR-33

The interim DACS system station equipment package is composed of two units. These are:

(1) Receive only modem, manufactured by Time and Frequency Technology.

(2) KSR-43 printing terminal, manufactured by Teletype Corporation and supplied by Alanthus Data Communications.

The basic configuration of this equipment is shown in Figure 1.

We strongly suggest that you locate the TFT equipment in your satellite equipment rack, since it must be within easy reach of the channel demodulators for the final DACS system. If you do not wish to locate the KSR-43 terminal at the same place, you may cable up to 250 feet from the TFT equipment to the terminal. The mating connector for the terminal is a Cannon DB-25S, and the mating connector for the TFT unit is a Cannon DB-25P. Although these are 25 pin connectors, only pins 2, 3, 7, 8, and 20 need be carried through. Any standard 5 conductor cable may be used. If you do not wish to assemble your own cable, Belden manufactures a line of ready-made assemblies for this purpose.

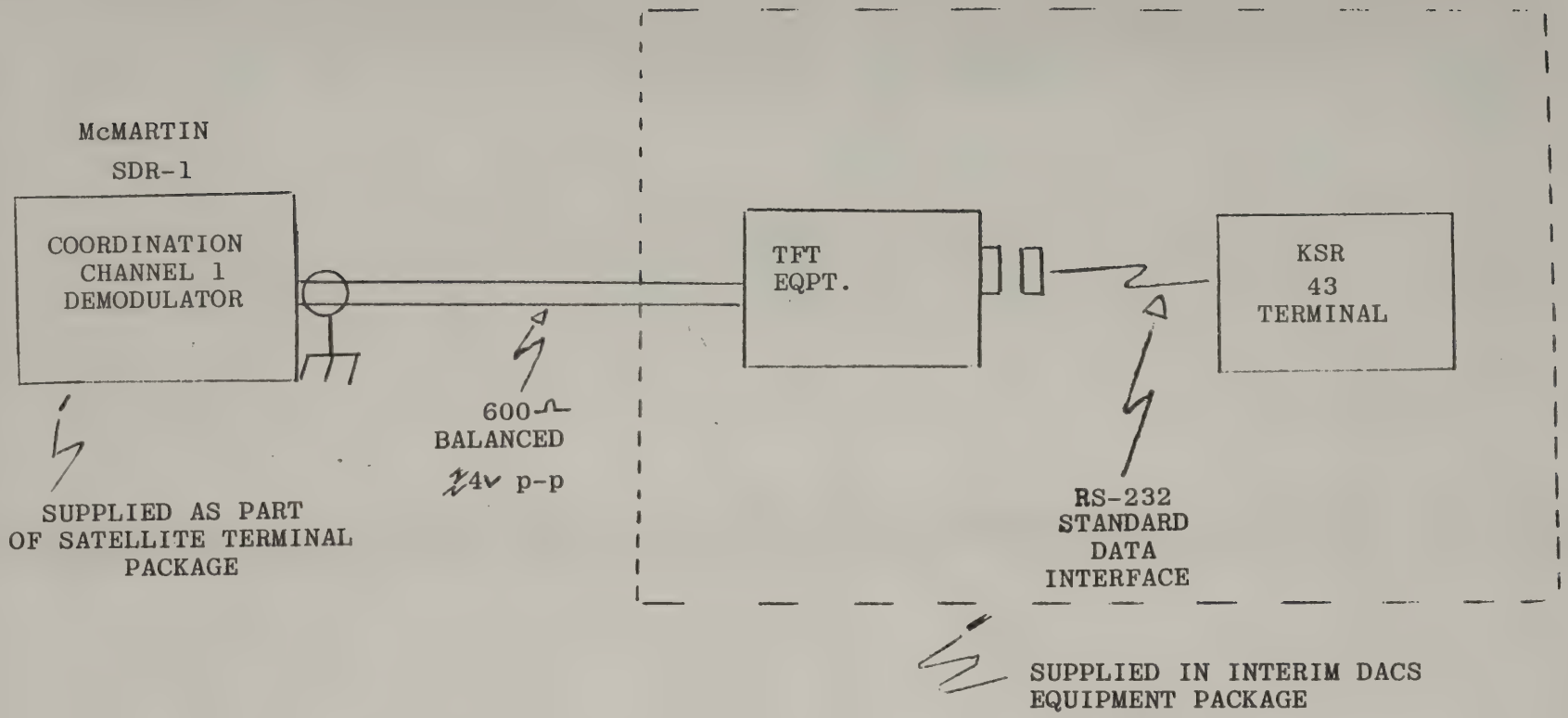

FIGURE 1: INTERIM DACS SYSTEM

BELDEN CABLES
(WITH CONNECTORS ATTACHED)

LENGTH	BELDEN PART NO.
5'	9652
10'	9653
25'	9654
50'	9655
70'	9656

Belden is located at P. O. Box 1327, Richmond, Indiana, 47374. The fastest procedure would be to contact them, and let them tell you the name of your local sales representative. The most expensive (70' cable) is roughly $65.00.

Installation Procedure

(1) Install TFT equipment and KSR-43 terminal in the desired location and perform wiring. The TFT equipment should be wired to the CC1 Demod unit using standard audio practice. The input terminals to the TFT unit are the left most pair as you face the rear of the unit. The output terminals of the CC1 Demod are lugs 2 and 3. If you are currently using your Netcue receiver on this demod, it may be parallelled with the TFT equipment.

(2) Adjust the CC1 Demod 'OUTPUT' control to the furthest counterclockwise position. Now, advance the same control one-third of a turn in the clockwise direction. If an oscilloscope is available, verify that the waveform being delivered by the CC1 Demod is approximately 1 volt peak to peak. Adjust as appropriate.*

This completes the installation procedure.

Disposition of Existing ASR-33 Terminals

As discussed in the Engineering newsletter, stations will be given the option to purchase the ASR-33 terminals for an on "as-is" price of $350.00. If this option is elected, all maintenance and communications expenses become the responsibility of the stations.

NPR Engineering strongly encourages stations to take advantage of this purchase option. By retaining the ASR-33, stations have an independent path for inbound communication to NPR which will not

*This adjustment must be made during the DACS operating hours (0200 to 0500) if oscilloscope measurements are to be used.

interfere with outbound DACS message printing. Also, keeping the ASR-33 unit on a dedicated telephone circuit will give stations a dial network backup for DACS message delivery in the event of a satellite system problem. When Alanthus contacts you about this purchase, be advised that you need not exercise this option until your ASR-33 is scheduled for removal, at which time Alanthus must so notify you at least two weeks in advance. Alanthus will be happy to work with individual stations to modify the ASR-33 equipment to better conform to local phone line standards and other requirements. Please be advised that automatic DACS dial backup service will require the ASR-33 phone line arrangement be maintained as originally installed.

The Final DACS System and the New Netcue

The components you have already received will be revised in the final DACS configuration. For more information on this and the new Netcue system, please consult ENGINEERING UPDATE. A series of articles will be presented to cover these topics.

REF:
P.C. BD: 1600-3273, REV B
P.C. BD ASSY: 6608-3273, R

REVISIONS		
DESCRIPTION	DATE	APPROVED
SED FOR PROD'CTN	9/3/80	Jan

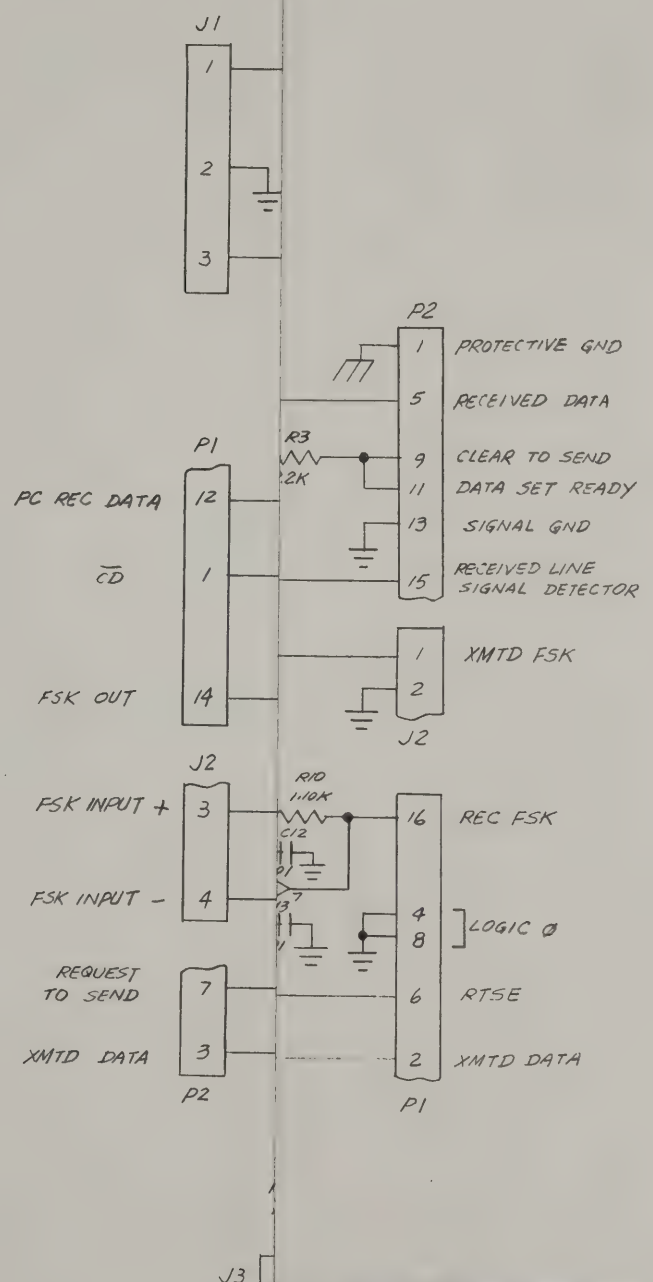

DWG. NO. 6601-3273
SH. 1
REV. A

TFT TIME & FREQUENCY TECHNOLOGY INC.

SCHEMATIC RECEIVER
POWER SUPPLY & INTERFACE

FSCM NO.	DWG. NO.	REV.
	6601-3273	A
E NONE		SHEET 1 OF 1

BISHOP GRAPHICS/ACCUPRESS
REORDER NO. A-4107

REF:
P.C. BD: 1600-3273, REV B
P.C. BD ASSY: 6608-3273, REV A

REVISIONS				
ZONE	REV.	DESCRIPTION	DATE	APPROVED
	A	RELEASED FOR PROD'CTN	9/3/80	

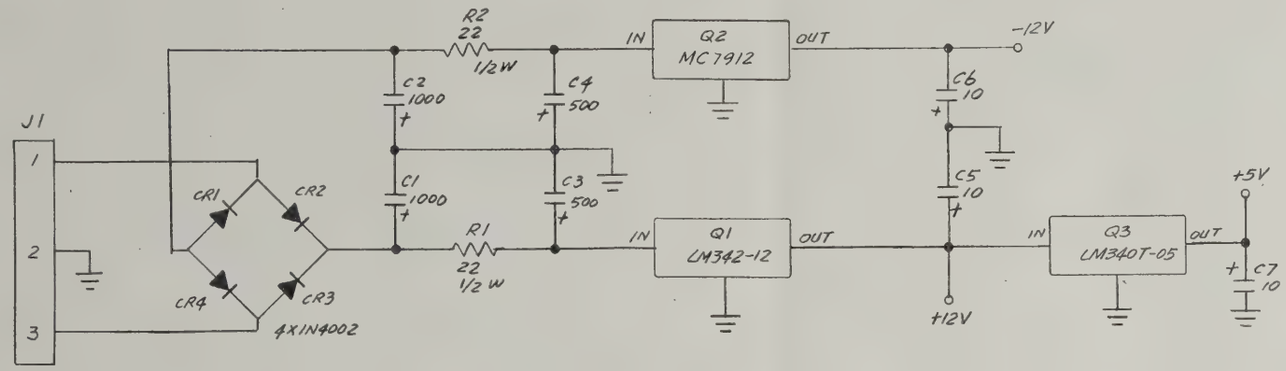

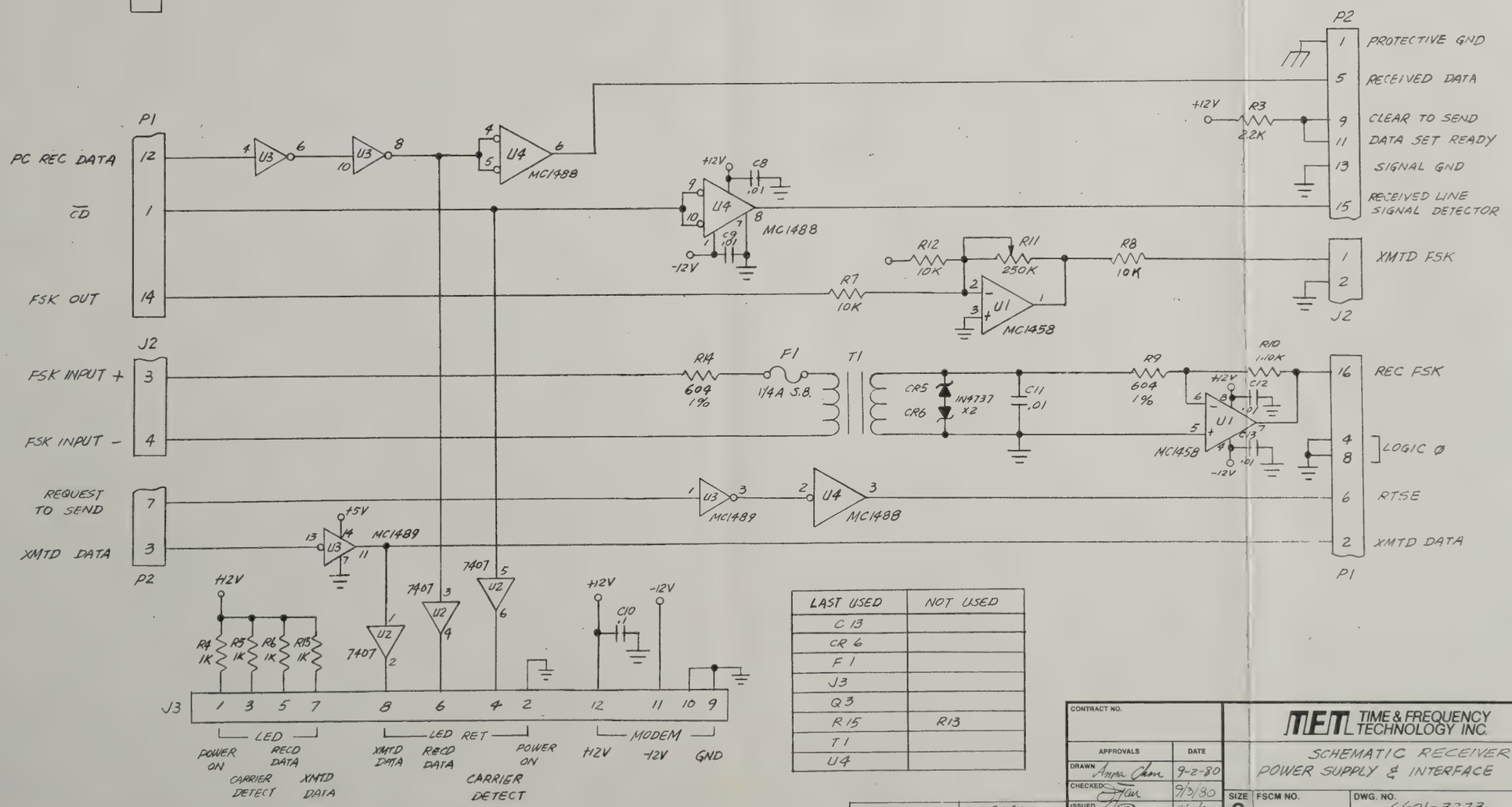

LAST USED	NOT USED
C 13	
CR 6	
F 1	
J3	
Q3	
R 15	R13
T 1	
U4	

6608-3273	8091
NEXT ASSY	USED ON

CONTRACT NO.		
APPROVALS	DATE	
DRAWN Anna Chan	9-2-80	
CHECKED	9/3/80	
ISSUED	9/3/80	
	9/4/80	

TIME & FREQUENCY TECHNOLOGY INC.

SCHEMATIC RECEIVER POWER SUPPLY & INTERFACE

SIZE	FSCM NO.	DWG. NO.	REV.
C		6601-3273	A
SCALE None		SHEET 1 OF 1	

DWG. NO. 6601-3273 SH 1 REV A

BISHOP GRAPHICS/ACCUPRESS REORDER NO. A-4107

NEXT ASSY	USED ON
608-3282	8041

REVISIONS

SYM	DESCRIPTION	DR	CHK	AUTH	DATE
A	RELEASED FOR PRODUCTION	AC	JT	JF	9/4/80

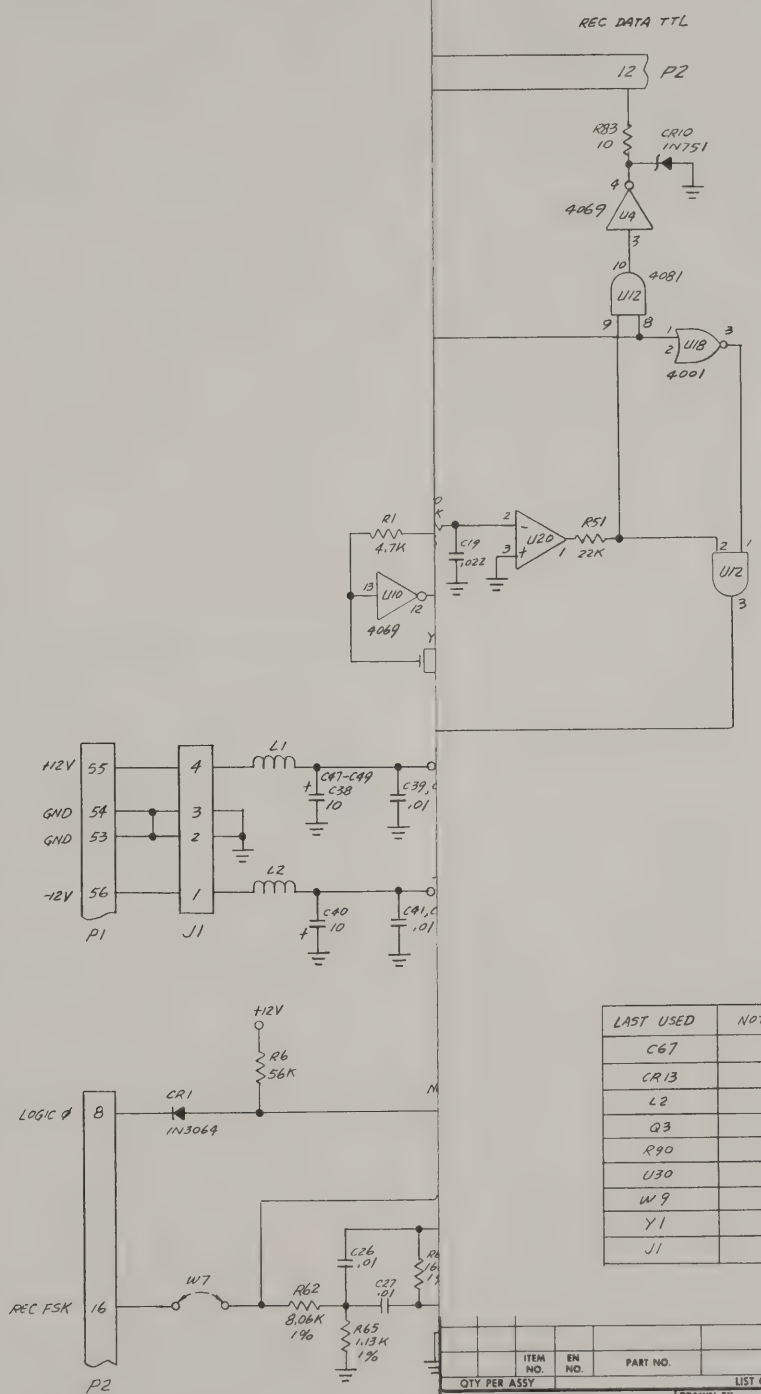

LAST USED	NOT USED
C67	
CR13	
L2	
Q3	
R90	
U30	
W9	
Y1	
J1	

QTY PER ASSY	ITEM NO.	EN NO.	PART NO.	DESCRIPTION	REF DES

LIST OF MATERIALS

REMOVE ALL BURRS AND SHARP EDGES

TOLERANCES UNLESS OTHERWISE SPECIFIED
.XX ± ~ ANGULAR
.XXX ± ~ ± ~

DO NOT SCALE THIS PRINT

		DATE
DRAWN BY	Anna Chow	8-26-80
CHK BY		8/27/80
PROJ ENG		9-3-80
MFG ENG		9/4/80
APPD		10-4-80
APPD		
ECO NO		

TFT TIME & FREQUENCY TECHNOLOGY INC
3000 Olcott St., Santa Clara California 95050
(408) 246-6365

TITLE LO-BAND MODEM RECEIVER

SIZE D | DRAWING NO 6601-3282 | REV. A

SCALE NONE | SHT 1 OF 1

DWG. NO. 6601-3282

BISHOP GRAPHICS/ACCUPRESS REORDER NO A-1538

NEXT ASSY	USED ON
6608-3282	8041

REVISIONS					
SYM	DESCRIPTION	DR	CHK	AUTH	DATE
A	RELEASED FOR PRODUCTION	AC	JT	JT	9/4/80

DWG. NO. 6601-3282

LAST USED	NOT USED
C67	
CR13	
L2	
Q3	
R90	
U30	
W9	
Y1	
J1	

ITEM NO.	EN NO.	PART NO.	DESCRIPTION	REF DES	QTY PER ASSY

LIST OF MATERIALS

REMOVE ALL BURRS AND SHARP EDGES

TOLERANCES UNLESS OTHERWISE SPECIFIED
.XX ± ~ ANGULAR
.XXX ± ~ ± ~

DO NOT SCALE THIS PRINT

	DRAWN BY	DATE
	CHK BY	8/27/80
	PROJ. ENG	9.3.80
	MFG ENG	8/4/80
	APPD	10-4-80
	APPD	
	ECO NO	

TFT TIME & FREQUENCY TECHNOLOGY INC
3000 Olcott St., Santa Clara California 95050
(408) 246-6365

TITLE: LO-BAND MODEM RECEIVER

SIZE D | DRAWING NO 6601-3282 | REV A

SCALE NONE | SHT 1 OF 1

BISHOP GRAPHICS/ACCUPRESS REORDER NO. A-1538

TFT INC
3090 OAKMEAD VILLAGE DR. • SANTA CLARA, CA 95051 • (408) 727-7272 • TWX 910-338-0584

CUSTOMER SERVICE BULLETIN NO. 8101

TO: National Public Radio Affiliates

FROM: Douglas Hooton - Customer Service Manager

DATE: June 5, 1981

SUBJECT: TFT Model 8041 Low Band Modem - Sensitivity Modification

It has been brought to our attention that some Model 8041 low band modems are overly sensitive and will operate on noise when such noise exceeds the modem threshold.

To correct this problem the following changes should be made to set the modem minimum threshold level above the noise peaks:

1. Remove R33 (22K resistor)

2. Replace R78 (7.78 K resistor) with the enclosed 15K resistor.

These changes are incorporated in the drawing and parts list which are attached. Modems with S/N 409 and higher are already updated by the factory.

This change should set the FSK lower limit to -26 $\pm$ 2 dBm.

If you have any problems with or questions regarding this procedure, please contact the TFT Customer Service Department for assistance at (408) 727-7272.

DH/jw